FF450R12ME4

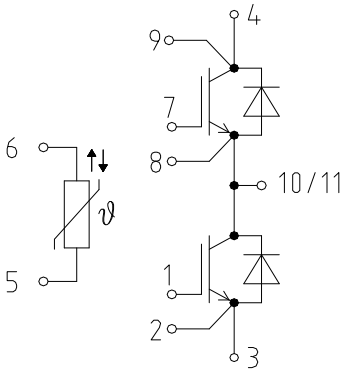

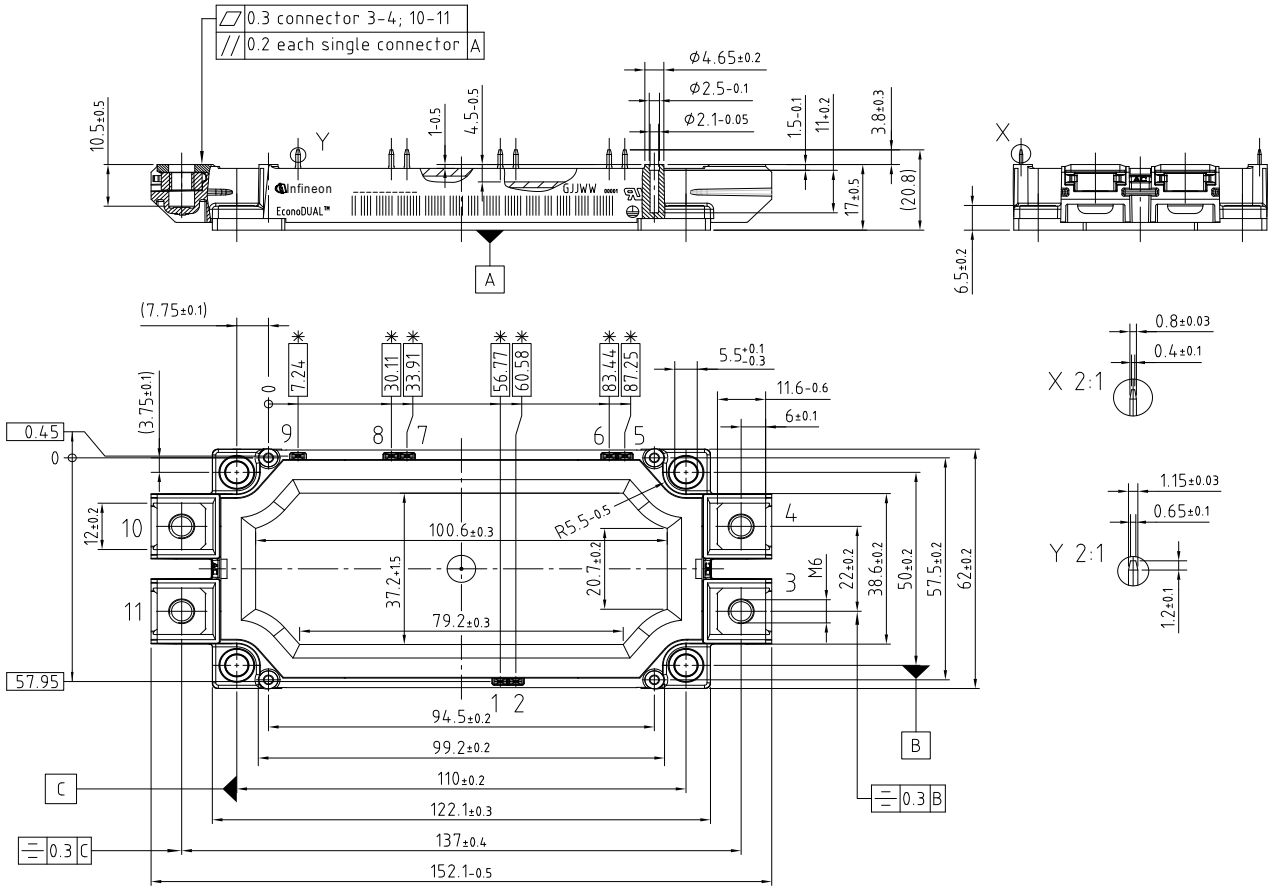

✳ = all dimensions with a tolerance of ⊕ Φ0.5

dimensions valid in mounted condition