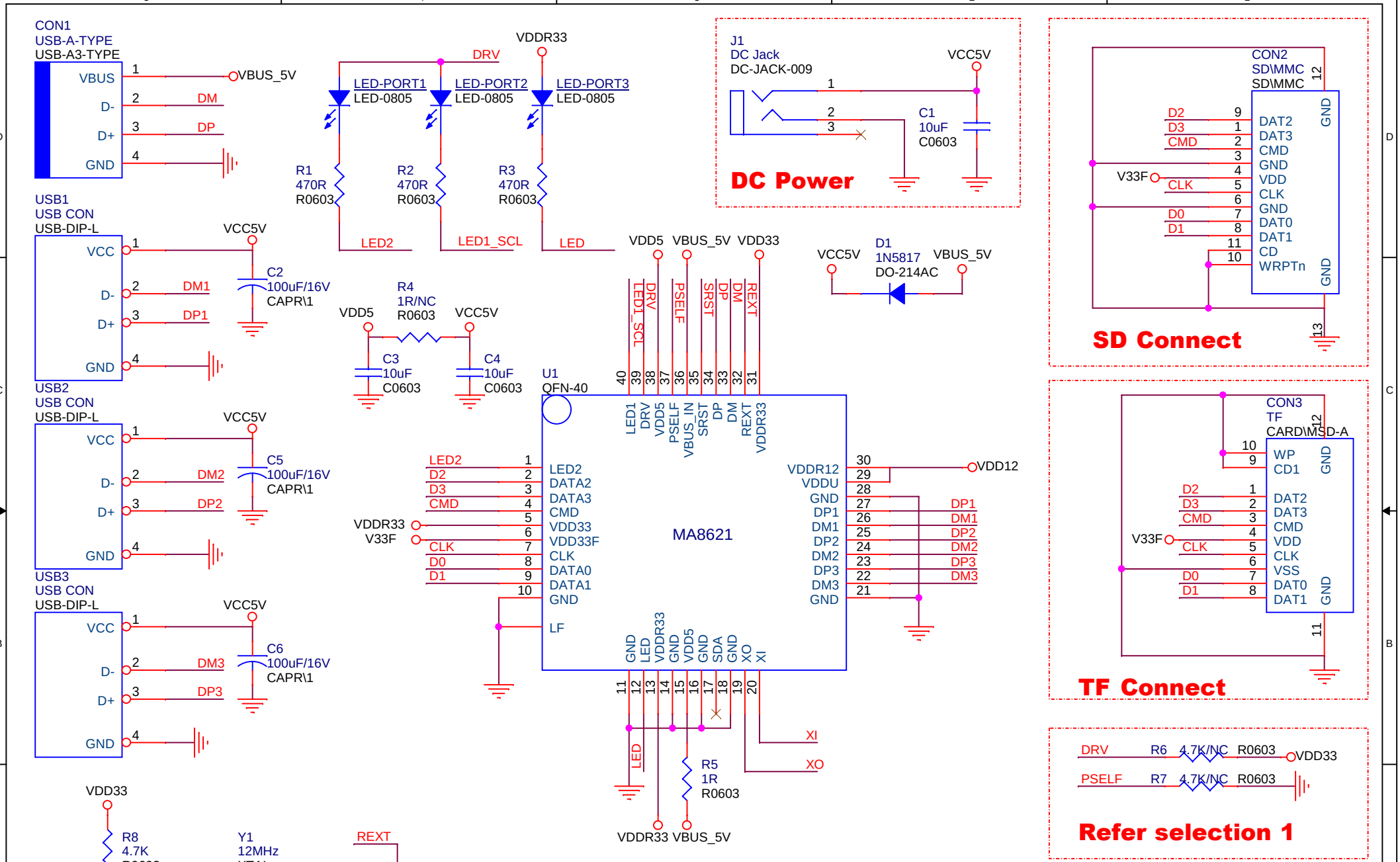

qq:1659747718 tel:18520874087 安格瑞杨S

Title	MA8621_QFN40_Demo Board	
Size A	Document Number MA8621	Rev 0.1
Date: Wednesday, May 28, 2014	Sheet 1 of 1	